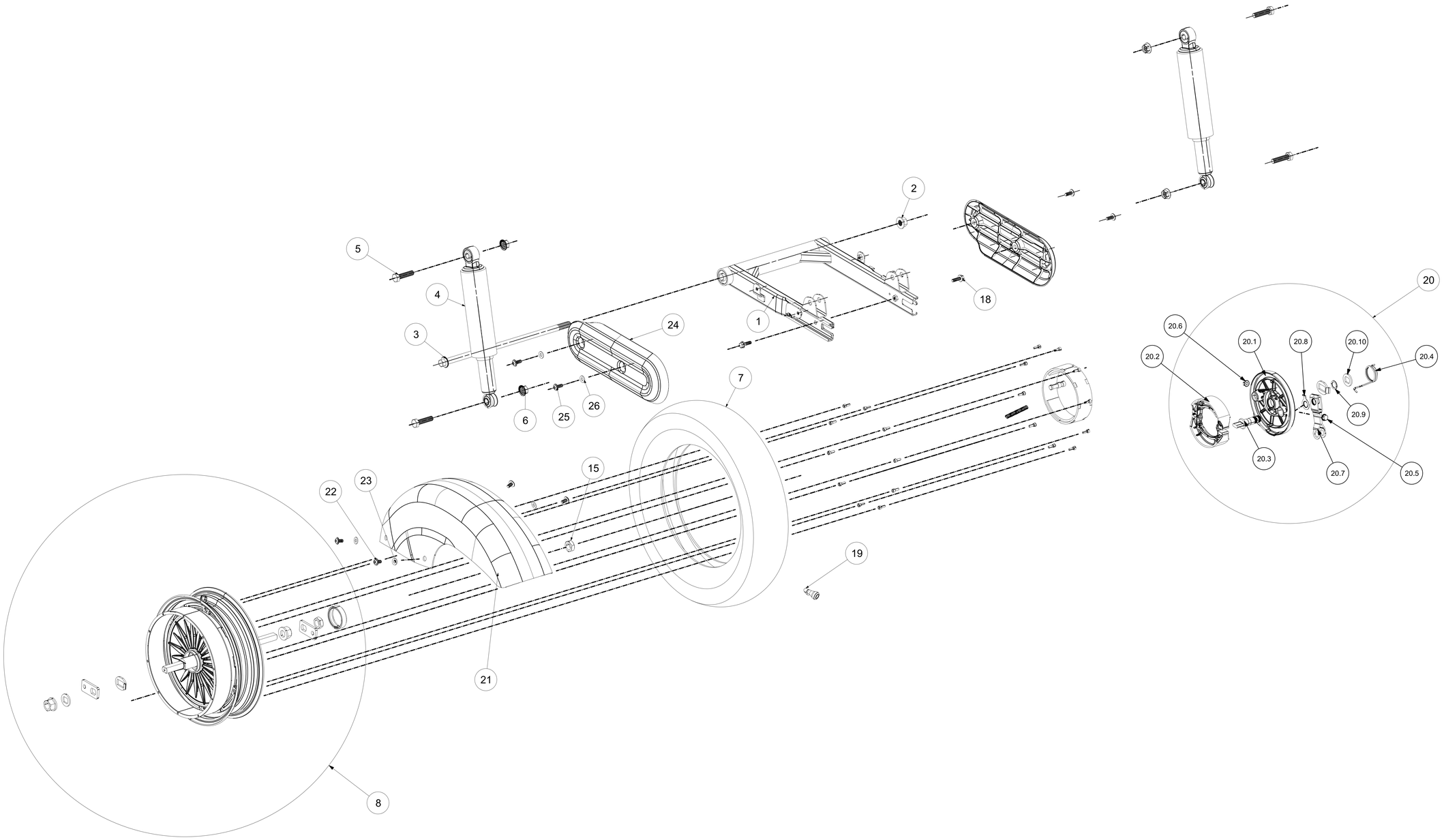REAR WHEEL ASSEMBLY